SUPER 塑寶牌 塑宝®

磁力驅動系列

SM 型無軸封耐酸鹼泵浦

Magnetic drive Sealless chemical pump

SUPER PUMPS

MODEL IDENTIFICATION
型號說明

SM	F	-	25	250	1	H	C	-	6	V	R	N
1	2		3	4	5	6	7		8	9	10	11

(1) Type機型編號

(2) Pump Material
泵體材質
F-FRPP.
K-PVDF.
P-CFRPP.

(3) In-Outlet口徑
20-3/4"
25-1"
30-1-1/4"x1"

(4) Power馬力
100-100W 180-180W
250-260W 400-400W
750-750W

(5) Single Phase1-單相
Three Phase3 -三相

(6) H-Hose/管式
S-Thread/外牙式

(7) Shaft軸心 S-SSIC
T-Titanium/鈦
C-Ceramic/陶瓷

(8) Frequency頻率
5:50Hz 6:60Hz

(9) Elastomer橡膠材質
V-VITON. N-NBR.
E-EPDM.

(10) Bearing Material
軸受材質 R-RULON
C-Carbon/炭素

(11) Model規格
N-Standard/標準規格
S-Special(Sp-Gravity)
/特殊規格(有比重)

小SM泵是簡單、堅固、耐用，做的最好的磁力驅動泵之一特殊的設計特色。

- 馬達為堅固的 密閉式風扇冷卻結構，而且是雙層的epoxy塗裝。
- 小SM泵加上陶瓷軸心及雙陶瓷止推墊片，使得其與同級產品比較起來，運轉更順暢及增加其耐久性.
- 此泵為無軸封設計，可供貨的材質有FRPP, PVDF, CFRPP.
- 此泵可供貨的密封材質有 VITON, NBR 或 EPDM.
- 抽送的藥水不會與金屬零件接觸.

SM series pumps are simple, tough and rugged and are one of the best built magnetic coupled pump in the world.Specific Features:

- The motor is of solid TEFC construction and is painted with 2 parts epoxy paint.
- The SM series pumps incorporates ceramic shaft and dual trust bearings to give smoother running and increased durability compared to other pumps in it's class.
- The pumps are seal-less and are available in FRPP, PVDF, CFRPP.
- The pumps are available with VITON, NBR or EPDM gaskets.
- The pumps have no metallic parts in contact with the solution being pumped.

SPECIFICATIONS PERFORMANCE CHART
規格/性能曲線

※ 重量/性能以實物為準
Weight / Performance Is For Reference Only Actual Product May Vary

(測試流體：水 比重1.0)
Test Fluid : Water Sp.Gravity 1.0

Model 型 式	In/Outlet 進出口徑 (In)	Power 馬力	Phase 相 數	50HZ			60HZ			Weight 重量kg (參考值)
				Curve 曲線	Max.Head 全揚程 M	Max.Flow 全流量 L/min	Curve 曲線	Max.Head 全揚程 M	Max.Flow 全流量 L/min	
20100-1	3/4"X3/4"	100	1ø	a	6.0	60	A	7.5	68	7.0
20100-3	3/4"X3/4"	100	3ø	a	6.0	60	A	7.5	68	7.0
20180-1	3/4"X3/4"	180	1ø	b	6.6	67	B	9	80	8.0
20180-3	3/4"X3/4"	180	3ø	b	6.6	67	B	9	80	8.0
25180-1	1"x1"	180	1ø	c	6.7	88	C	9.1	100	8.0
25180-3	1"x1"	180	3ø	c	6.7	88	C	9.1	100	8.0
25250-1	1"x1"	260	1ø	d	13	115	D	12.3	130	13.0
25250-3	1"x1"	260	3ø	d	13	115	D	12.3	130	13.0
25400-1	1"x1"	400	1ø	d	13	115	E	17	150	14.0
25400-3	1"x1"	400	3ø	d	13	115	E	17	150	14.0
30400-1	1-1/4"x1"	400	1ø	f	16	130	F	16	130	15.0
30400-3	1-1/4"x1"	400	3ø	f	16	130	F	16	130	15.0
25750-3	1"x1"	750	3ø				G	21	150	15.0
30750-3	1-1/4"x1"	750	3ø				H	25	160	15.0

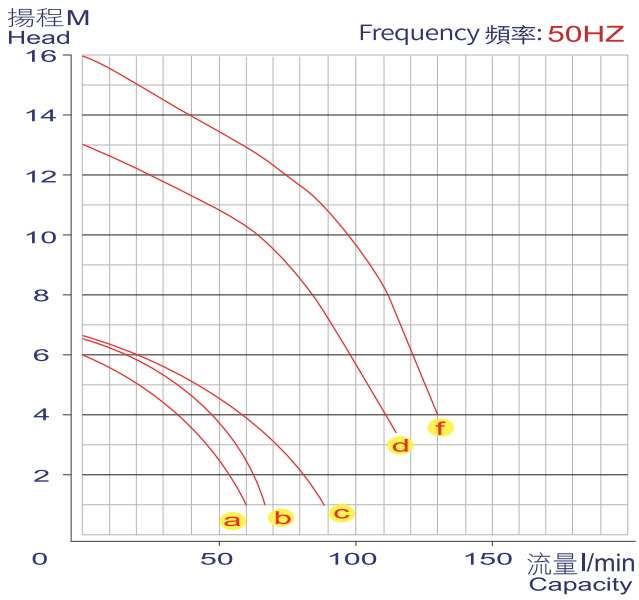

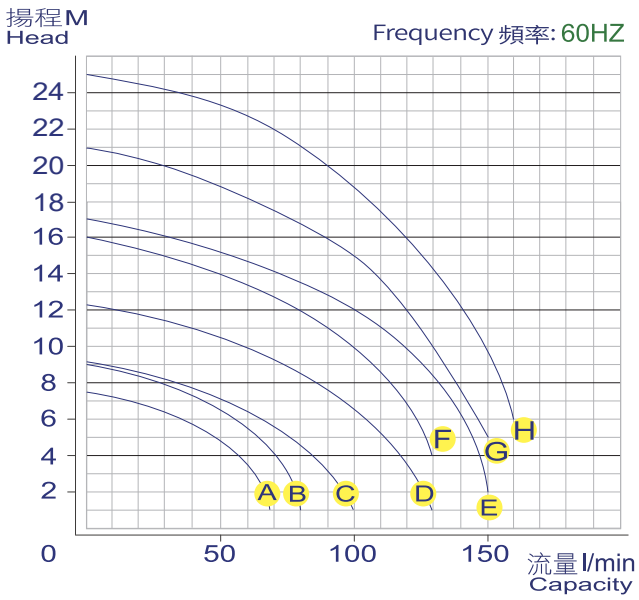

INTERIOR PARTS
內部元件

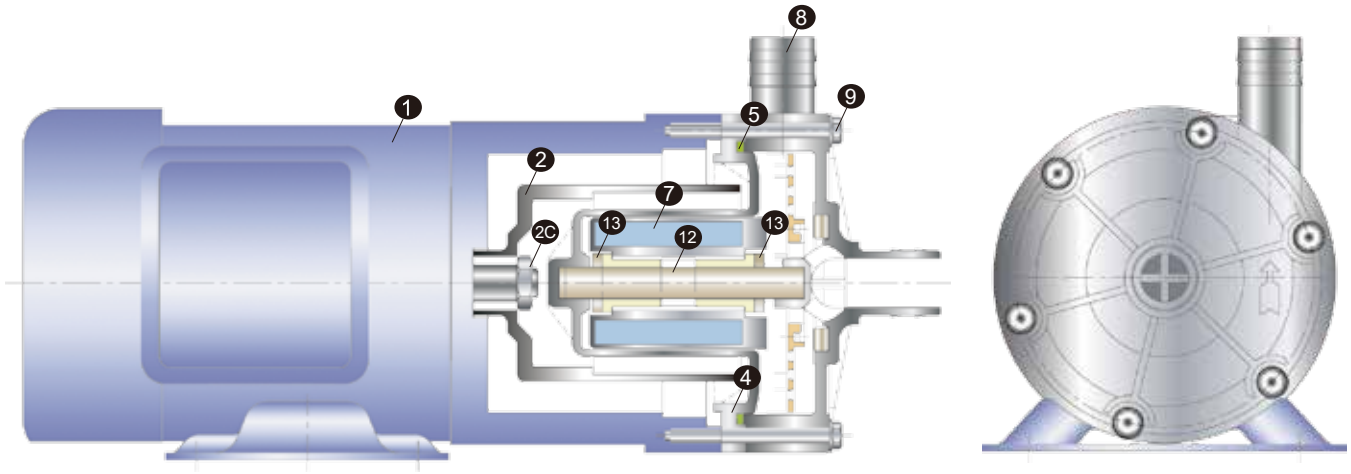

SM 100W ~ 750W

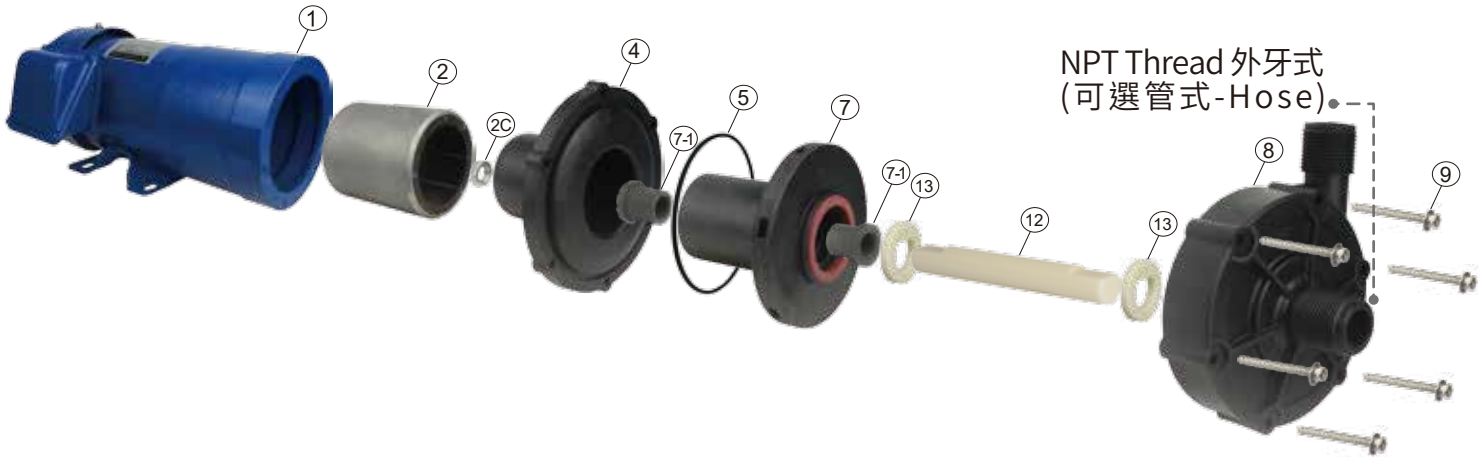

CONSTRUCTION
零件圖表

1	2	2C	4	5	7	7-1	8
馬達 Motor	外驅動磁鐵 Drive Magnet	外磁鐵固定螺帽 Magnet Fasten Nut	後蓋 Rear cover	封蓋O環 Casing O-ring	葉輪 Impeller	葉輪軸受 Impeller Bearing	前蓋 Front Casing
FC/Alu	Magnet	SUS304	FRPP/PVDF CFRPP	NBR/EPDM VITON	FRPP/PVDF CFRPP	Rulon/Carbom	FRPP/PVDF CFRPP

9	12	13
前蓋與馬達固定螺絲/Bolts	軸心 Shaft	雙止推墊片 Washer
SUS304	Ceramic/SSIC /Titanium	Ceramic/ssic

DIMENSIONS
外觀尺寸

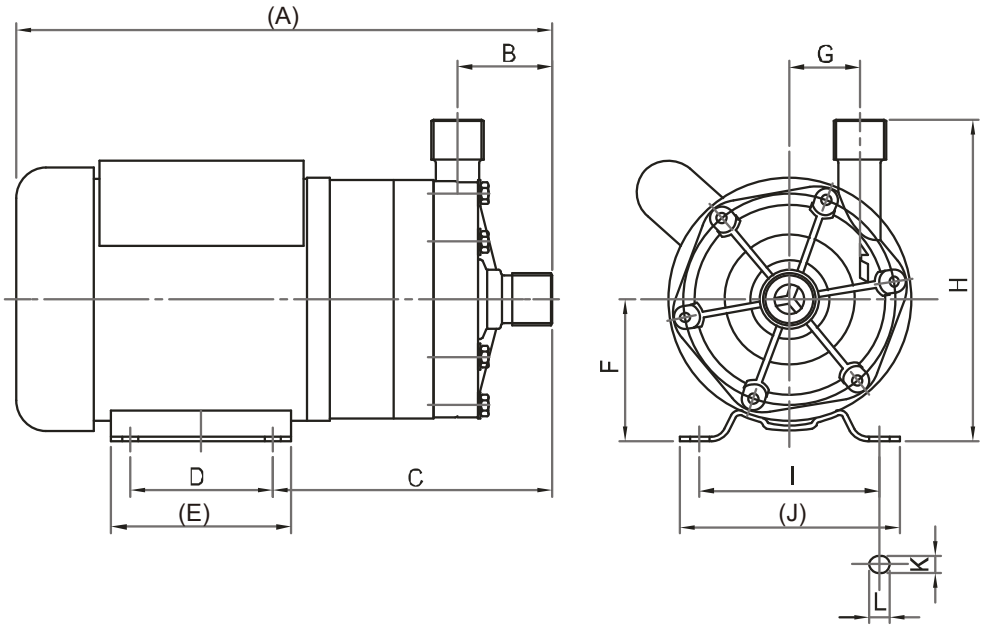

DIMENSION 尺寸表

Unit (單位):mm

Model 型 式	In-Outlet進出口徑 Dimension(mm)	A	B	C	D	E	F	G	H	I	J	K	L
SM-20100	20 X 20	305	46.5	145	71	90	71	35	161	90	110	8	10
SM-20180	20 X 20	305	46.5	145	71	90	71	35	161	90	110	8	10
SM-25180	25 X 25	304	45.5	145	71	90	71	35	161	90	110	8	10
SM-25250	25 X 25	400	64	215	90	120	71	43.5	171	112	151	10	20
SM-25400	25 X 25	400	64	215	90	120	71	43.5	171	112	151	10	20

SUPER 塑寶牌 塑宝®

磁力驅動系列

SM 型無軸封耐酸鹼泵浦

Magnetic drive Sealless chemical pump

SUPER PUMPS

INTERIOR PARTS
內部元件

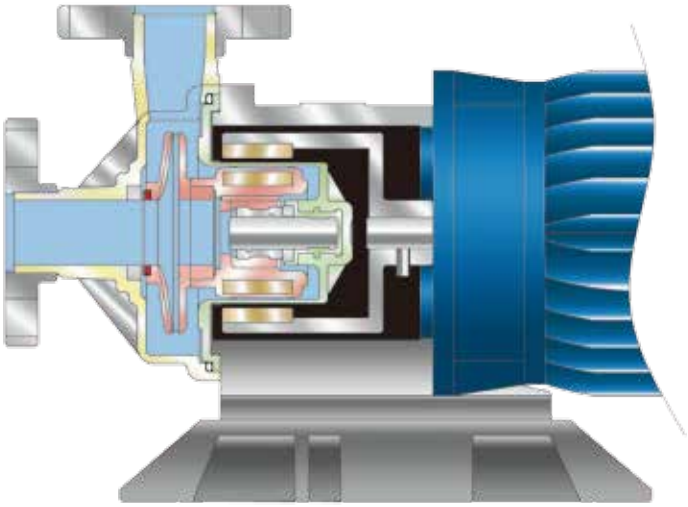

No friction seal, this seal-less construction eliminates the leakage may caused by mechanical seal and can be applied to various applications.

不需要磨耗的機械軸封，此一無軸封設計排除了機械軸封所可能導致的洩漏問題， 且用途廣泛。

FEATURES OF CRITICAL PARTS
重要設計/特殊零件

Ⓐ Oval-shaped flange holes suit different standards like DIN, JIS and ANSI. Easy for mounting.
法蘭以橢圓形螺絲孔設計，適合 DIN，JIS 及 ANSI等各種尺寸，安裝便利。

Ⓑ Available engineering plastic FRPP and PVDF prevent the attack of most chemicals.
泵體採用 FRPP,CFRPP,PVDF等各種塑鋼材料射出成型，可適用於大部分的化學藥水。

Ⓒ New embedded construction makes the impeller extremely strong and also extends its service life.
新型葉輪的嵌入式結構大大地強化了葉輪的強度，也延長其使用壽命。

Ⓓ Small, powerful magnets maximizes efficiency and long term use.
採用強力磁鐵，體積小，磁力強，驅動力大，永不退磁。

Ⓔ High-purity aluminum oxide, SSIC, Rulon and various other low friction part materials are available that compliment the pump's anti-corrosive features.
高純度氧化鋁，碳化矽，Rulon 選用不同的磨耗零件使泵浦的耐腐蝕力更優良。

Ⓕ Unique engineering plastic bracket construction, excellent in anti-corrosion, light and handy and more powerful strength.
Small window enables you to check the rotating direction easily.
專利設計以塑鋼接合座製成, 耐腐蝕性優良, 輕便, 強度更佳, 塑鋼接合座上有視窗設計, 可目視運轉方向.

MODEL IDENTIFICATION
型號說明

SM	F	- 40	1	H	C	- 6	V	C	N
1	2	3	4	5	6	7	8	9	10

(1) Type機型編號
-SM

(2) Pump Material
泵體材質
F-FRPP.
P-CFRPP.
K-PVDF.

(3) In-Outlet口徑
25-1" 40-1-1/2"
50-2"
60-2-1/2"X2"
65-2-1/2"

(4) Power馬力
0-1/2HP 1-1HP
2-2HP 3-3HP
5-5HP 7-7.5HP

(5) Head揚程
H -High Head高揚程

(6) Shaft軸心
C-Ceramic/陶瓷
S-SSIC T-鈦

(7) Frequency頻率
5:50Hz
6:60Hz

(8) Elastomer橡膠材質
V-VITON. N-NBR.
E-EPDM.

(9) Bearing Material
軸受材質
R-RULON
C-Carbon/炭素
A-Ceramic/陶瓷
S-SSIC

(10) Model規格
N-Standard/標準規格
S-Special(Sp-Gravity)
/特殊規格(有比重)
Y-永磁電機

- 採用塑膠材質射出成型，依客戶使用之化學性選擇不同材質，耐酸、耐鹼。
- 可耐大部分的化學性，適合各種酸鹼液循環冷卻輸送作業。
- 適用溫度：FRPP，CFRPP，PVDF-85℃以下，視各種化學性之不同而定。
- 塑膠射出成型之底座，輕便，耐腐蝕。

- Various plastic injection molded parts for different chemicals.
- Anti-corrosion for various chemicals, suitable for acid and alkaline solution circulating.
- Max. fluid temperature: FRPP/CFRPP/PVDF 85°C, depending on the chemicals.
- Injection molded plastic frame, portable and corrosion-resisted.

SPECIFICATIONS PERFORMANCE CHART
規格/性能曲線

※ 重量/性能以實物為準
Weight / Performance Is For Reference Only Actual Product May Vary

(測試流體：水 比重1.0)
Test Fluid : Water Sp.Gravity 1.0

Model 型 式	In/Outlet 進出口徑 (In)	Power馬力			50HZ			60HZ			Weight 重量kg (參考值)
		Phase 相 數	HP	Pole 極 數	Curve 曲線	Max.Head 全揚程 M	Max.Flow 全流量 L/min	Curve 曲線	Max.Head 全揚程 M	Max.Flow 全流量 L/min	
250H	1" X 1"	3	1/2	2	a	15	160	A	14.5	170	16/22
251H	1" X 1"	3	1	2	b	21	200	B	22	200	18/24
400H	1-1/2" X 1-1/2"	3	1/2	2	c	9.5	280	C	10.5	275	16/22
401H	1-1/2" X 1-1/2"	3	1	2	d	15	320	D	16	340	18/24
402H	2" X 1-1/2"	3	2	2	e	22	400	E	22	420	25/37
502H	2" X 2"	3	2	2	f	20	410	F	21	380	25/37
403H	2" X 1-1/2"	3	3	2	g	23	440	G	29.5	540	28/40
503H	2" X 2"	3	3	2	h	23	440	H	28	420	28/40
505H	2" X 2"	3	5	2	i	29	480	I	38	520	40/54
605H	2-1/2" X 2"	3	5	2	j	28	800	J	35	530	40/54
655H	2-1/2" X 2-1/2"	3	5	2	k	30	840	K	30	860	40/54
657H	2-1/2" X 2-1/2"	3	7.5	2	l	32	860	L	42	920	50/65

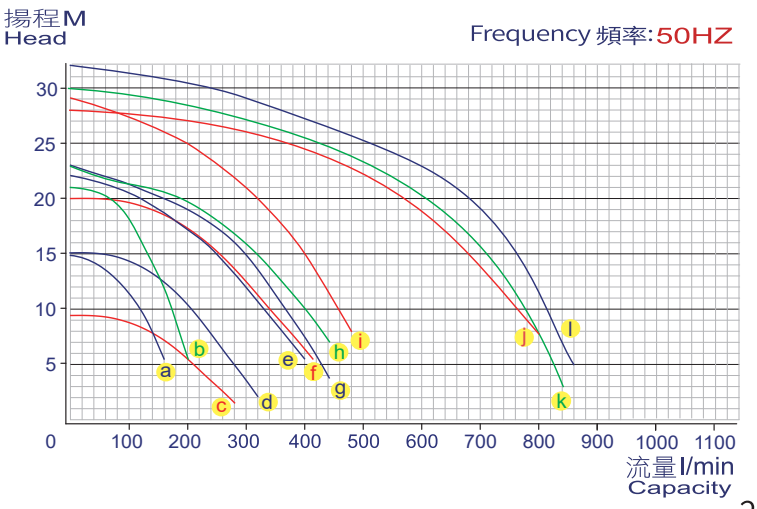

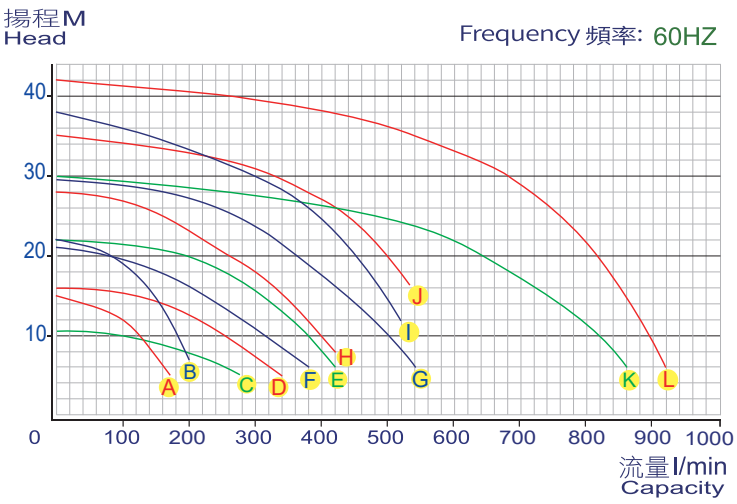

MODEL IDENTIFICATION
型號說明

SM	F	- 40	1	L	C	- 6	V	C	N
1	2	3	4	5	6	7	8	9	10

(1) Type機型編號
-SM

(2) Pump Material
泵體材質
F-FRPP.
P-CFRPP.
K-PVDF.

(3) In-Outlet口徑
40-1-1/2"
50-2"
60-2-1/2"X2"
65-2-1/2"

(4) Power馬力
1-1HP 2-2HP
3-3HP 5-5HP
7-7.5HP

(5) Head揚程
L-Low Head低揚程
4Pole 4-低轉速

(6) Shaft軸心
C-Ceramic/陶瓷
S-SSIC
T-鈦

(7) Frequency頻率
5:50Hz
6:60Hz

(8) Elastomer橡膠材質
V-VITON. N-NBR.
E-EPDM.

(9) 軸受材質
R-RULON
C-Carbon/炭素
A-Ceramic/陶瓷
S-SSIC T-Teflon

(10) Model規格
4-4Pole Motor/4極電機
N-Standard/標準規格
S-Special(Sp-Gravity)
/特殊規格(有比重)
Y-永磁電機

- 採用塑膠材質射出成型，依客戶使用之化學性選擇不同材質，耐酸、耐鹼。
- 可耐大部分的化學性，適合各種酸鹼液循環冷卻輸送作業。
- 適用溫度：FRPP，CFRPP，PVDF-85℃以下，視各種化學性之不同而定。
- 塑膠射出成型之底座，輕便，耐腐蝕。

- Various plastic injection molded parts for different chemicals.
- Anti-corrosion for various chemicals, suitable for acid and alkaline solution circulating.
- Max. fluid temperature: FRPP/CFRPP/PVDF 85°C, depending on the chemicals.
- Injection molded plastic frame, portable and corrosion-resisted.

SPECIFICATIONS PERFORMANCE CHART
規格/性能曲線

※ 重量/性能以實物為準
Weight / Performance Is For Reference Only Actual Product May Vary

(測試流體：水 比重1.0)
Test Fluid : Water Sp.Gravity 1.0

Model 型 式	In/Outlet 進出口徑 (In)	Power馬力			50HZ			60HZ			Weight 重量kg (參考值)
		Phase 相 數	HP	Pole 極 數	Curve 曲線	Max.Head 全揚程 M	Max.Flow 全流量 L/min	Curve 曲線	Max.Head 全揚程 M	Max.Flow 全流量 L/min	
401L	1-1/2" X 1-1/2"	3	1	2	b	9.5	280	B	10.5	270	18/24
402L	2" X 1-1/2"	3	2	2	c	16	390	C	18.5	380	25/37
502L	2" X 2"	3	2	2	e	17	430	E	18	420	25/37
403L	2" X 1-1/2"	3	3	2	g	18	450	G	20.5	500	28/40
503L	2" X 2"	3	3	2	i	18	515	I	20	530	28/40
603L	2-1/2" X 2"	3	3	2	q	25	400	Q	22	500	28/40
653L	2-1/2" X 2-1/2"	3	3	2	m	20	720	M	19.5	800	28/40
605L	2-1/2" X 2"	3	5	2	r	25	530	R	26	530	40/54
655L	2-1/2" X 2-1/2"	3	5	2	n	22	820	N	26	860	40/54
657L	2-1/2" X 2-1/2"	3	7.5	2	o	32	860	O	30	860	50/65
4014	2" X 1-1/2"	3	1	4	l	8	260	S	11	340	18/24
5014	2" X 2"	3	1	4	t	8	300	T	10	350	18/24
6524	2-1/2" X 2-1/2"	3	2	4	p	7	350	P	9	450	26/38

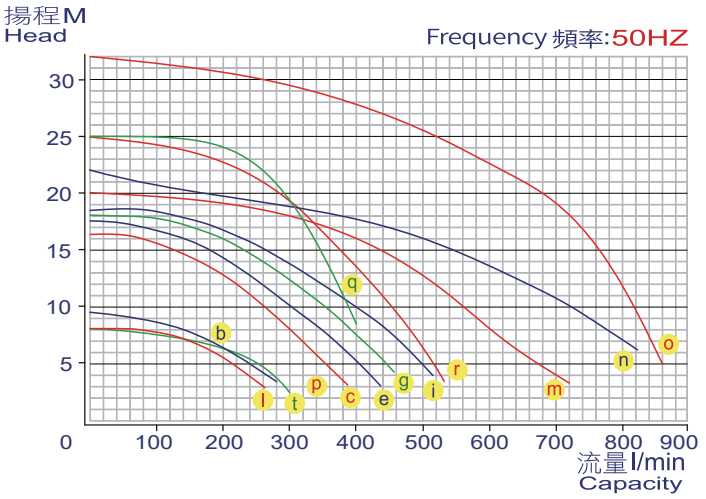

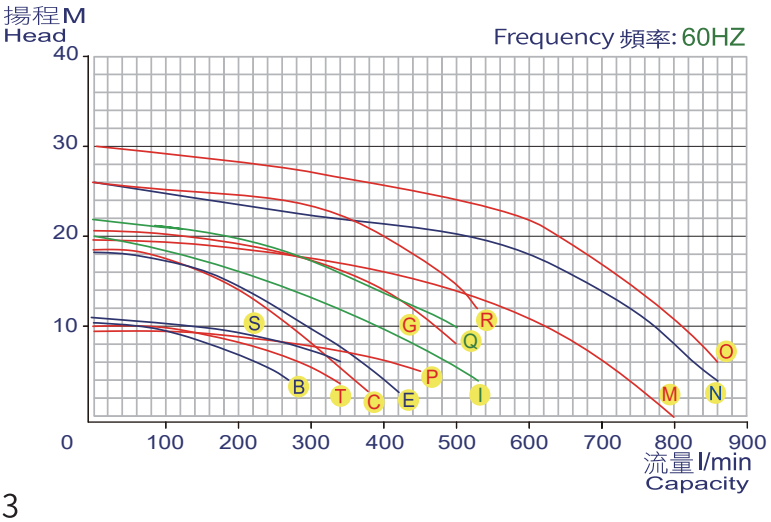

SM 1/2 ~ 71/2 H P

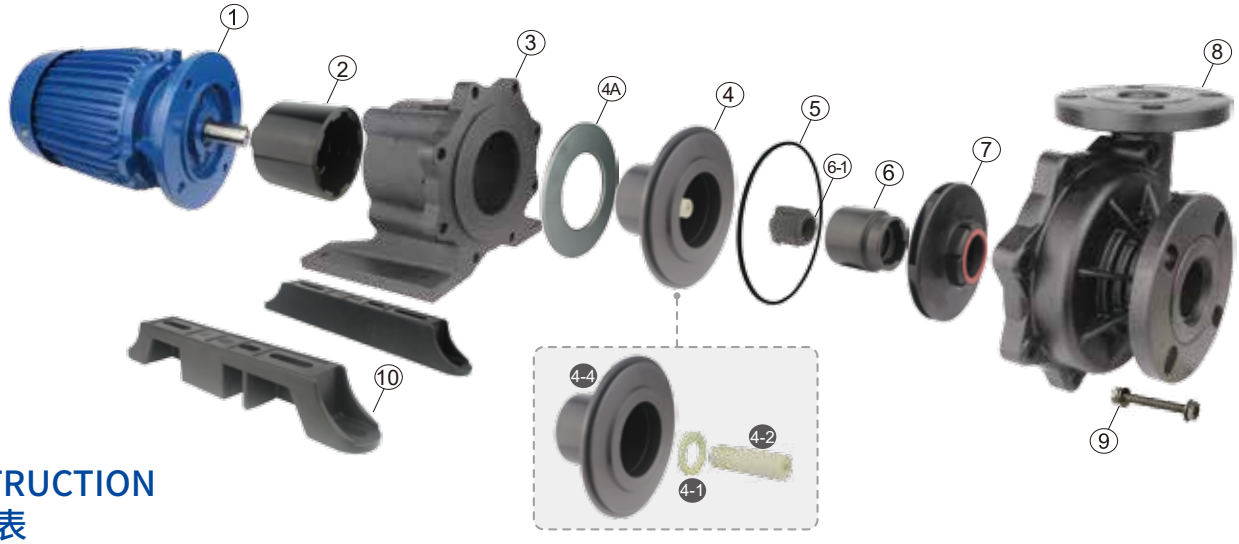

CONSTRUCTION
零件圖表

1	2	3	4	4-1	4-2	4-4	4A	5	6
馬達 Motor	外驅動磁鐵 Drive Magnet	接合座 Frame	後蓋含軸心 Rear cover and shaft	墊片 Washer	軸心 Shaft	後蓋 Rear cover	後蓋鐵片 Housing Stiffener	封蓋O環 Casing O-ring	葉輪內磁 Drive Magnet
FC/Alu	Magnet	FRPP	FRPP/PVDF CFRPP	Ceramic/SSIC	Ceramic/SSIC	FRPP/PVDF CFRPP	Zinc plated iron	NBR/EPDM VITON	FRPP/PVDF CFRPP

6-1	7	8	9	10
葉輪軸受 Impeller Bearing	葉輪 Impeller	前蓋 Front Casing	前蓋與接合座固定螺絲/Bolts	腳架 Base
Rulon/Carbom Ceramic/SSIC	FRPP/PVDF CFRPP	FRPP/PVDF CFRPP	SUS304	FRPP

DIMENSIONS
外觀尺寸

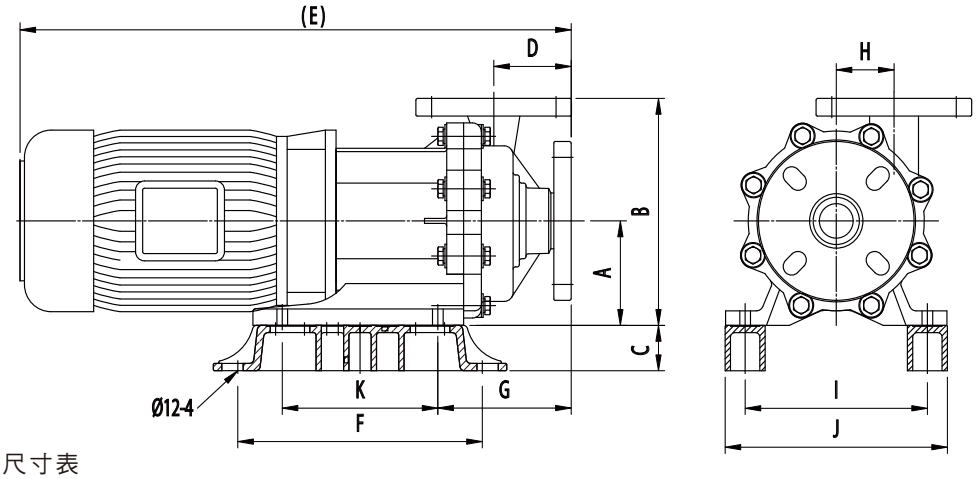

DIMENSION 尺寸表

Unit (單位):mm

Model 型 式	In-Outlet進出口徑 Dimension(mm)	A	B	C	D	E	F	G	H	I	J	K
SM-400	40 x 40	115	255	50	100	500	280	164	60	205	250	141
SM-401	40 x 40	115	255	50	100	500	280	164	60	205	250	141
SM-402	50 x 40	115	250	50	90	585	280	150	65	205	250	175
SM-502	50 x 50	115	250	50	90	585	280	150	65	205	250	175
SM-403	50 x 40	115	250	50	90	585	280	150	65	205	250	175
SM-503	50 x 50	115	250	50	90	585	280	150	65	205	250	175
SM-653	65 x 65	115	253	50	82	585	280	146.5	65	205	250	175
SM-505	50 x 50	115	250	50	90	620	330	150	65	205	250	175
SM-655	65 x 65	115	253	50	82	620	330	146.5	65	205	250	175
SM-4014	50 x 40	115	250	50	90	500	280	150	65	205	250	175
SM-5014	50 x 50	115	250	50	90	505	280	150	65	205	250	175
SM-6514	65 x 65	115	250	50	82	505	280	146.5	65	205	250	175
SM-6524	65 x 65	115	253	50	82	585	280	146.5	65	205	250	175

SUPER 塑寶牌 塑宝®

磁力驅動系列

CM 型無軸封耐酸鹼泵浦

Magnetic drive Sealless chemical pump

SUPER PUMPS

INTERIOR PARTS
內部元件

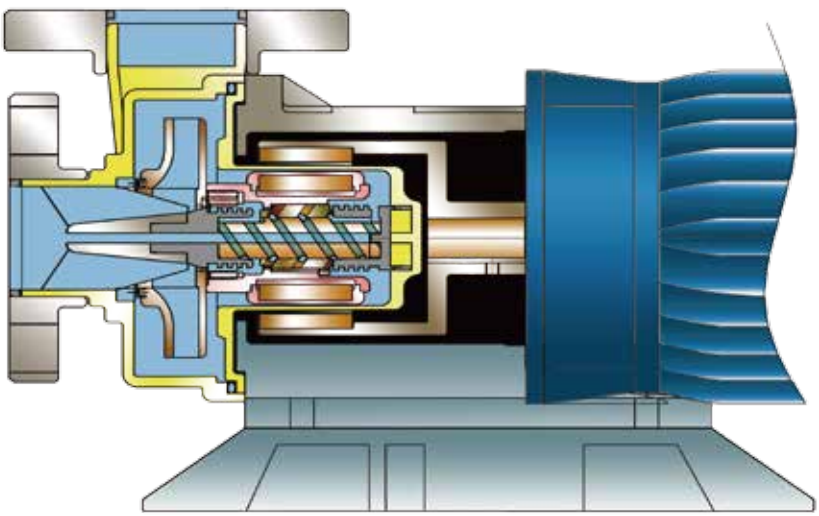

No friction seal, this seal-less construction eliminates the leakage may caused by mechanical seal and can be applied to various applications.

不需要磨耗的機械軸封，此一無軸封設計排除了機械軸封所可能導致的洩漏問題， 且用途廣泛。

FEATURES OF CRITICAL PARTS
重要設計/特殊零件

Ⓐ Oval-shaped flange holes suit different standards like DIN, JIS and ANSI. Easy for mounting.

法蘭以橢圓形螺絲孔設計，適合 DIN，JIS 及 ANSI等各種尺寸，安裝便利。中心支撐柱中空設計。

Ⓑ Available engineering plastic FRPP and PVDF prevent the attack of most chemicals.

泵體採用 FRPP,CFRPP,PVDF等各種塑鋼材料射出成型，專利設計有可拆式中心支撐座。

Ⓒ Patented removable slotted shaft design allows for easy disassembly and shaft replacement which increases long term cost effectiveness.

專利設計可拆式前後軸心套筒，易拆易換而空轉性優，維護成本低。

Ⓓ Patented cooling blades located at the Front/Rear sleeve when the liquid into the ditch will be a heat dissipation system.That will protect the part from broken in the outlet jammed.Patented chassis (Impeller bearing) design features internal and external vent ducts that reduces friction caused by material expansion.

專利設計前後有軸心套筒，軸心穿孔設計液體吸入形成循環排熱系統，當出口阻塞流量很小時也不易損壞。專利設計軸受，內孔設有冷卻溝槽，外部也有冷卻溝槽，與軸心摩擦系數低，冷卻效果佳，耐空轉性優。

Ⓔ Patented cooling blades located at the middle of the shaft help dissipate heat caused by friction.

專利設計軸心上有冷卻溝槽，內孔中空設計，使熱氣容易帶出，降低摩擦熱量，提高冷卻效果。

Ⓕ Unique engineered plastic bracket construction is anti-corrosive while being both lightweight and sturdy. Small window enables the user to easily check rotational direction.

獨特設計以塑鋼接合座製成, 耐腐蝕性優良, 輕便, 強度更佳, 塑鋼接合座上有視窗設計, 可目視運轉方向。

MODEL IDENTIFICATION
型號說明

CM	F	- 40	2	H	C	- 6	V	C	S
1	2	3	4	5	6	7	8	9	10

(1) Type機型編號
-CM

(2) Pump Material
泵體材質
F-FRPP.
P-CFRPP.
K-PVDF.

(3) In-Outlet口徑
40-1-1/2" 50-2"
60-2-1/2"X2"
65-2-1/2"
70-3"X2-1/2"
75-3"X3"

(4) Power馬力
2-2HP 3-3HP
5-5HP 7-7.5HP

(5) Head揚程
H -High Head
高揚程

(6) Shaft軸心
C-Ceramic/陶瓷

(7) Frequency頻率
5:50Hz
6:60Hz

(8) Elastomer橡膠材質
V-VITON.
N-NBR.
E-EPDM.

(9) Bearing Material軸受材質
R - RULON
C-Carbon/炭素
A-Ceramic/陶瓷
S - SSIC

(10) Model規格
N-Standard/標準規格
S-Special(Sp-Gravity)
/特殊規格(有比重)

- 榮獲台灣，中國、日本多國專利，是磁力泵的一大革新。
- 泵體前蓋有專利設計可拆式中心支撐座後蓋，及可拆式中心支撐前蓋，可特別選用耐高溫材料（PVDF, CFRPP）
- 不易空轉損壞，維修成本低。
- 軸心通孔空心設計，提高冷卻效果，在空轉時能提高散熱能力。
- 適用溫度：FRPP，CFRPP，PVDF-85℃以下，視各種化學性之不同而定。
- 塑膠射出成型之底座，輕便，耐腐蝕。

- A big innovation of magnetic pumps, patented by Taiwan, China and Japan.
- Patented replaceable shaft support sleeves in pump head with optional plastic PVDF/CFRPP for higher temperature in dry running. Low cost in maintenance.
- Hollow shaft helps heat sinking in dry running.
- Max. fluid temperature: FRPP/CFRPP/PVDF 85°C, depending on the chemicals.
- Injection molded plastic frame, portable and corrosion-resisted.

SPECIFICATIONS PERFORMANCE CHART
規格/性能曲線

※ 重量/性能以實物為準
Weight / Performance Is For Reference Only Actual Product May Vary

(測試流體：水 比重1.0)
Test Fluid : Water Sp.Gravity 1.0

Model 型式	In/Outlet 進出口徑 (In)	Power馬力			50HZ			60HZ			Weight 重量kg (參考值)
		Phase 相數	HP	Pole 極數	Curve 曲線	Max.Head 全揚程 M	Max.Flow 全流量 L/min	Curve 曲線	Max.Head 全揚程 M	Max.Flow 全流量 L/min	
402H	2" X 1-1/2"	3	2	2	d	20	400	D	20	380	25/37
502H	2" X 2"	3	2	2	f	20	410	F	21	380	25/37
403H	2" X 1-1/2"	3	3	2	h	23	440	H	29.5	540	28/40
503H	2" X 2"	3	3	2	j	21	440	J	28	420	28/40
505H	2" X 2"	3	5	2	k	29	590	K	40	650	40/54
605H	2-1/2" X 2"	3	5	2	s	28	800	S	35	530	40/54
655H	2-1/2" X 2-1/2"	3	5	2	t	30	840	T	30	860	40/54
705H	3" X 2-1/2"	3	5	2	u	27	840	U	26	940	41/55
707H	3" X 2-1/2"	3	7-1/2	2	v	32	880	V	35	980	50/
757H	3" X 3"	3	7-1/2	2	w	32	900	W	42	980	50/

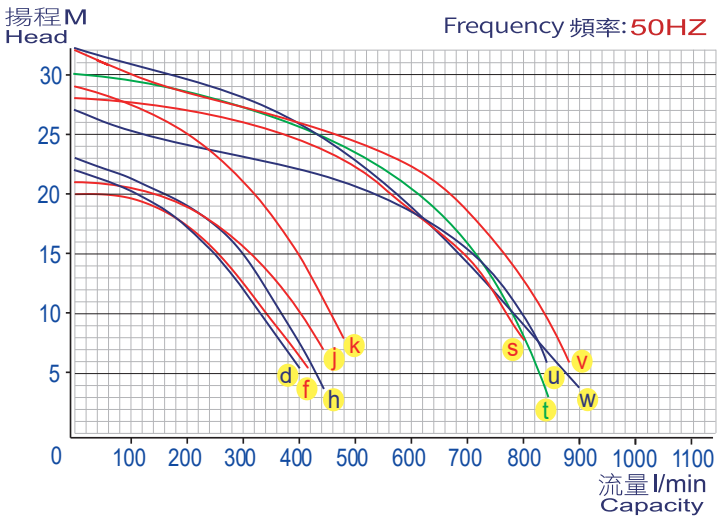

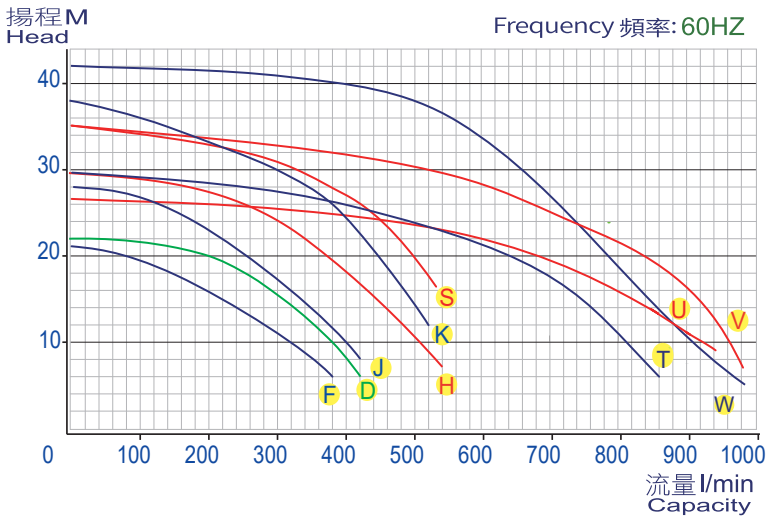

MODEL IDENTIFICATION
型號說明

CM	F	- 40	2	L	C	- 6	V	C	S
1	2	3	4	5	6	7	8	9	10

(1) Type機型編號
-CM

(2) Pump Material
泵體材質
F-FRPP.
P-CFRPP.
K-PVDF.

(3) In-Outlet口徑
40-1-1/2" 50-2"
60-2-1/2"X2"
65-2-1/2"
70-3"X2-1/2"

(4) Power馬力
2-2HP 3-3HP
5-5HP 7-7.5HP

(5) Head揚程
L -Low Head
低揚程
4Pole 4-低轉速

(6) Shaft軸心
C-Ceramic/陶瓷

(7) Frequency頻率
5:50Hz
6:60Hz

(8) Elastomer橡膠材質
V-VITON.
N-NBR.
E-EPDM.

(9) Bearing Material軸受材質
R-RULON
C-Carbon/炭素
A-Ceramic/陶瓷
S-SSIC

(10) Model規格
4-4Pole Motor/4極電機
N-Standard/標準規格
S-Special(Sp-Gravity)
/特殊規格(有比重)

- 榮獲台灣，中國、日本多國專利，是磁力泵的一大革新。
- 泵體前蓋有專利設計可拆式中心支撐座後蓋，及可拆式中心支撐前蓋，可特別選用耐高溫材料（PVDF, CFRPP）
- 不易空轉損壞，維修成本低。
- 軸心通孔空心設計，提高冷卻效果，在空轉時能提高散熱能力。
- 適用溫度：FRPP，CFRPP，PVDF-85℃以下，視各種化學性之不同而定。
- 塑膠射出成型之底座，輕便，耐腐蝕。

- A big innovation of magnetic pumps, patented by Taiwan, China and Japan.
- Patented replaceable shaft support sleeves in pump head with optional plastic PVDF/CFRPP for higher temperature in dry running. Low cost in maintenance.
- Hollow shaft helps heat sinking in dry running.
- Max. fluid temperature: FRPP/CFRPP/PVDF 85°C, depending on the chemicals.
- Injection molded plastic frame, portable and corrosion-resisted.

SPECIFICATIONS PERFORMANCE CHART
規格/性能曲線

※ 重量/性能以實物為準
Weight / Performance Is For Reference Only Actual Product May Vary

(測試流體：水 比重1.0)
Test Fluid : Water Sp.Gravity 1.0

Model 型 式	In/Outlet 進出口徑 (In)	Power馬力			50HZ			60HZ			Weight 重量kg (參考值)
		Phase 相 數	HP	Pole 極 數	Curve 曲線	Max.Head 全揚程 M	Max.Flow 全流量 L/min	Curve 曲線	Max.Head 全揚程 M	Max.Flow 全流量 L/min	
402L	2" X 1-1/2"	3	2	2	c	16	390	C	18.5	380	25/37
502L	2" X 2"	3	2	2	e	17	430	E	18	420	25/37
403L	2" X 1-1/2"	3	3	2	g	18	450	G	20.5	500	28/40
503L	2" X 2"	3	3	2	i	18	515	I	20	530	28/40
603L	2-1/2" X 2"	3	3	2	q	25	400	Q	22	500	28/40
653L	2-1/2" X 2-1/2"	3	3	2	m	20	720	M	19.5	800	28/40
605L	2-1/2" X 2"	3	5	2	r	25	530	R	30	540	40/54
655L	2-1/2" X 2-1/2"	3	5	2	n	22	820	N	31	850	40/54
705L	3" X 2-1/2"	3	5	2	u	22	800	U	26	860	41/54
707L	3" X 2-1/2"	3	7-1/2	2	v	25	850	V	32	880	50/65
4004	2" X 1-1/2"	3	1/2	4	l	8	260	L	10	260	16/22
4014	2" X 1-1/2"	3	1	4	l	8	260	S	11	340	18/24
5014	2" X 2"	3	1	4	t	8	300	T	10	350	18/24
6524	2-1/2" X 2-1/2"	3	2	4	p	7	350	P	9	450	28/40

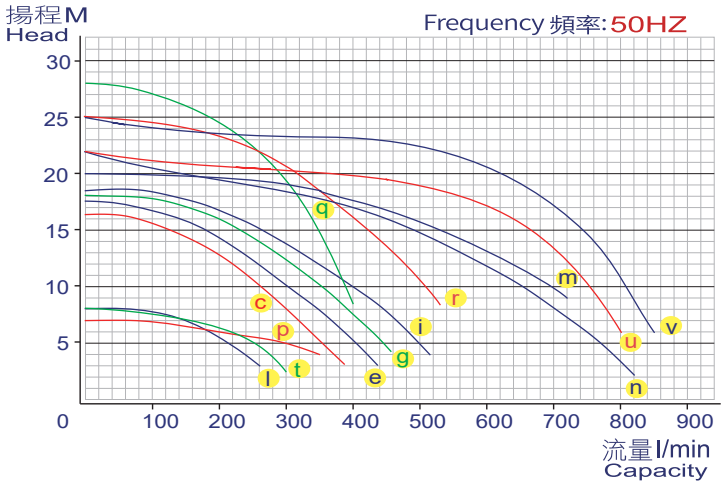

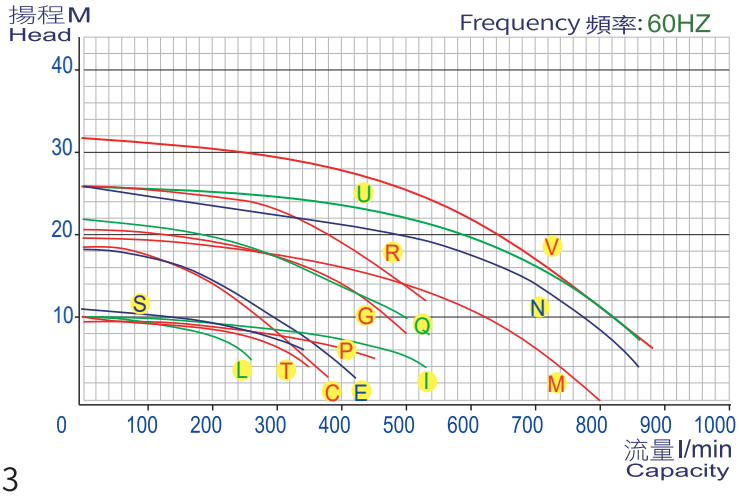

CM 1/2 ~ 7 1/2 H P

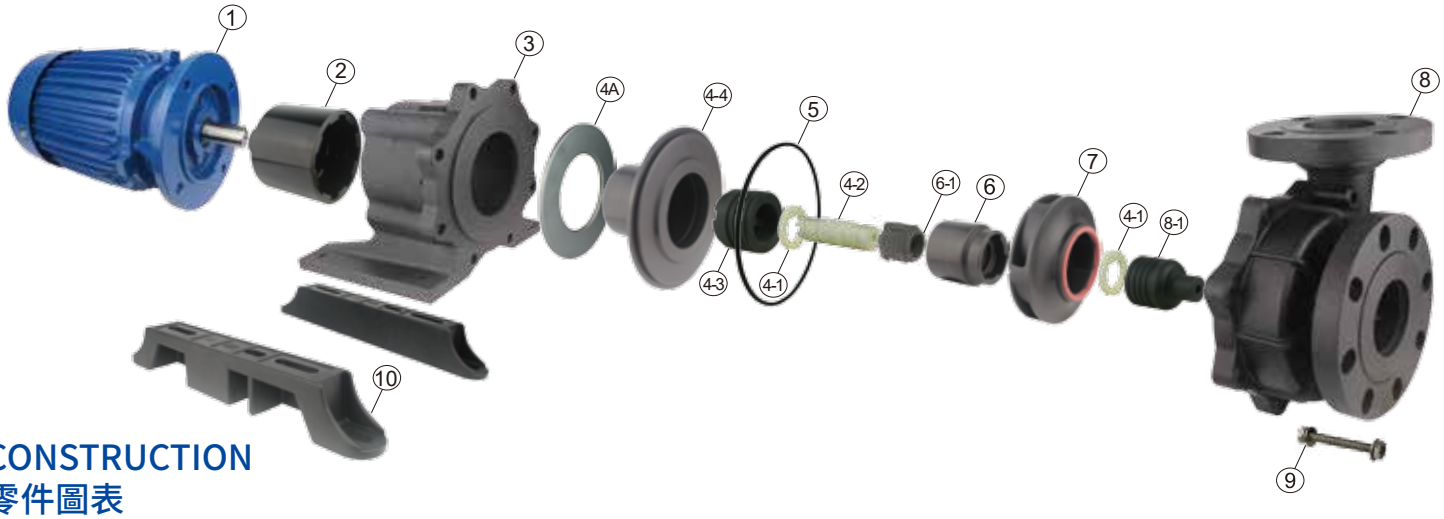

CONSTRUCTION
零件圖表

1	2	3	4-1	4-2	4-3	4-4	4A	5	6
馬達 Motor	外驅動磁鐵 Drive Magnet	接合座 Frame	墊片 Washer	軸心 Shaft	後軸心套筒 Rear sleeve	後蓋 Rear cover	後蓋鐵片 Housing Stiffener	封蓋O環 Casing O-ring	葉輪內磁 Drive Magnet
FC/Alu	Magnet	FRPP	Ceramic/ssic	Ceramic/ssic	PPS/SIC/PVDF	FRPP/PVDF CFRPP	Zinc plated iron	NBR/EPDM VITON	FRPP/PVDF CFRPP

6-1	7	8	8-1	9	10
葉輪軸受 Impeller Bearing	葉輪 Impeller	前蓋 Front Casing	前軸心套筒 Front sleeve	前蓋與接合座固定螺絲/Bolts	腳架 Base
Rulon/Carbom Ceramic/SSIC	FRPP/PVDF CFRPP	FRPP/PVDF CFRPP	PPS/SIC/PVDF	SUS304	FRPP

DIMENSIONS
外觀尺寸

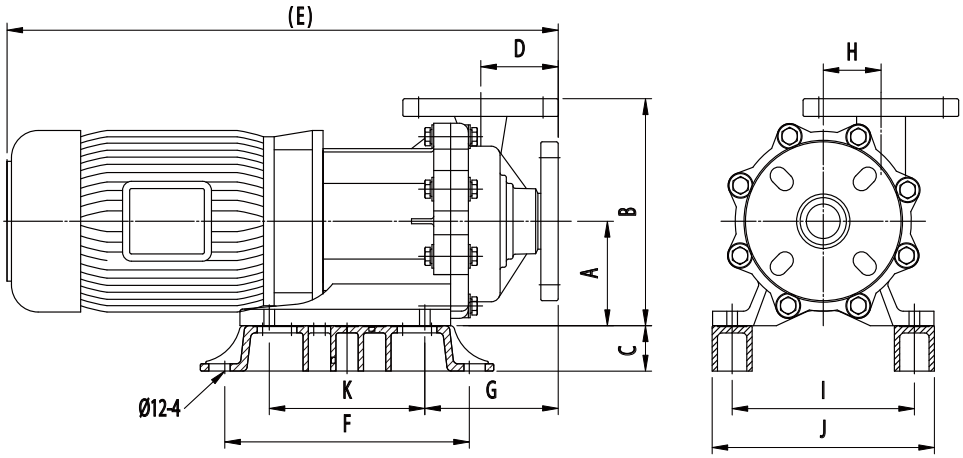

DIMENSION 尺寸表

Unit (單位):mm

Model 型 式	In-Outlet進出口徑 Dimension(mm)	A	B	C	D	E	F	G	H	I	J	K
CM-402	50 x 40	115	250	50	90	585	280	150	65	205	250	175
CM-502	50 x 50	115	250	50	90	585	280	150	65	205	250	175
CM-403	50 x 40	115	250	50	90	585	280	150	65	205	250	175
CM-503	50 x 50	115	250	50	90	585	280	150	65	205	250	175
CM-653	65 x 65	115	250	50	82	585	280	146.5	65	205	250	175
CM-505	50 x 50	115	250	50	90	620	330	150	65	205	250	175
CM-655	65 x 65	115	250	50	82	620	330	146.5	65	205	250	175
CM-705	70 x 65	115	275	50	90	625	330	155	65	205	250	175
CM-707	70 x 65	115	275	50	90	629	330	155	65	205	250	175
CM-401	50 x 40	115	250	50	90	500	280	150	65	205	250	175
CM-501	50 x 50	115	250	50	90	505	280	150	65	205	250	175
CM-651	65 x 65	115	250	50	82	505	280	146.5	65	205	250	175

SUPER 塑寶牌 塑宝®

磁力驅動系列

HM 型無軸封耐酸鹼泵浦

Magnetic drive Sealless chemical pump

SUPER PUMPS

INTERIOR PARTS
內部元件

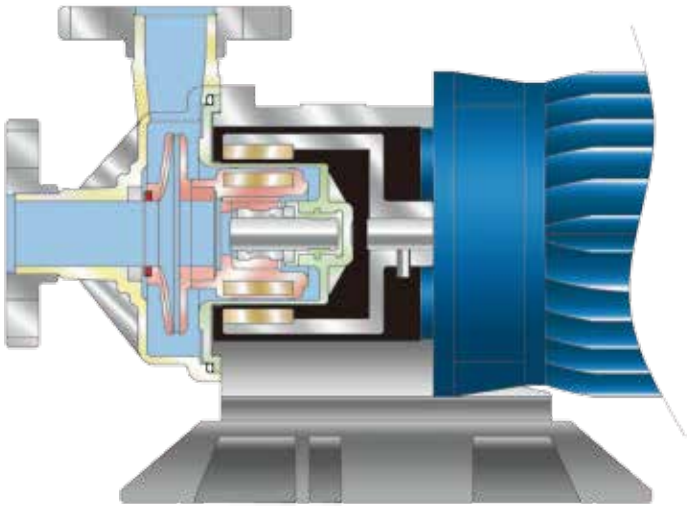

No friction seal, this seal-less construction eliminates the leakage may caused by mechanical seal and can be applied to various applications.

不需要磨耗的機械軸封，此一無軸封設計排除了機械軸封所可能導致的洩漏問題， 且用途廣泛。

FEATURES OF CRITICAL PARTS
重要設計/特殊零件

Ⓐ Oval-shaped flange holes suit different standards like DIN, JIS and ANSI. Easy for mounting.
法蘭以橢圓形螺絲孔設計，適合 DIN，JIS 及 ANSI等各種尺寸，安裝便利。

Ⓑ Available engineering plastic FRPP and PVDF prevent the attack of most chemicals.
泵體採用 FRPP,CFRPP,PVDF等各種塑鋼材料射出成型，可適用於大部分的化學藥水。

Ⓒ New embedded construction makes the impeller extremely strong and also extends its service life.
新型葉輪的嵌入式結構大大地強化了葉輪的強度，也延長其使用壽命。

Ⓓ Small, powerful magnets maximizes efficiency and long term use.
採用強力磁鐵，體積小，磁力強，驅動力大，永不退磁。

Ⓔ High-purity aluminum oxide, SSIC, Rulon and various other low friction part materials are available that compliment the pump's anti-corrosive features.
高純度氧化鋁，碳化矽，Rulon 選用不同的磨耗零件使泵浦的耐腐蝕力更優良。

Ⓕ Unique engineering plastic bracket construction, excellent in anti-corrosion, light and handy and more powerful strength.
Small window enables you to check the rotating direction easily.
專利設計以塑鋼接合座製成, 耐腐蝕性優良, 輕便, 強度更佳, 塑鋼接合座上有視窗設計, 可目視運轉方向.

MODEL IDENTIFICATION
型號說明

HM	F	- 65	5	H	C	- 6	V	C	S	N
1	2	3	4	5	6	7	8	9	10	11

(1) Type機型編號
-HM

(2) Pump Material
泵體材質 F-FRPP
K-PVDF P-CFRPP

(3) In-Outlet口徑
40:1-1/2"X2"
60:2"X2-1/2"
65:2-1/2"X2-1/2"
70:2-1/2"X3"

(4) Power馬力
2-2HP 3-3HP
5-5HP 7-7.5HP

(5) Head揚程
L-Low Head低揚程
H -High Head高揚程

(6) Shaft軸心
C-Ceramic/陶瓷
S - SSIC
T-鈦

(7) Frequency頻率
5-50HZ 6-60HZ

(8) Elastomer橡膠材質
V - VITON
N - NBR
E - EPDM

(9) Bearing Material軸受材質
R-RULON
C-Carbon/炭素
A-Ceramic/陶瓷
S-SSIC T-Teflon

(10)Base腳座
S-Flaf Base/平板腳座
H-Standard Base/長腳座

(11)Model規格
N-Standard/標準規格
S-Special(Sp-Gravity)
/特殊規格(有比重)
4-4Pole Motor/4極電機
Y-永磁電機

- 採用塑膠材質射出成型，依客戶使用之化學性選擇不同材質，耐酸、耐鹼。
- 可耐大部分的化學性，適合各種酸鹼液循環冷卻輸送作業。
- 適用溫度：FRPP，CFRPP，PVDF-85℃以下，視各種化學性之不同而定。
- 塑膠射出成型之底座，輕便，耐腐蝕。

- Various plastic injection molded parts for different chemicals.
- Anti-corrosion for various chemicals, suitable for acid and alkaline solution circulating.
- Max. fluid temperature: FRPP/CFRPP/PVDF 85°C, depending on the chemicals.
- Injection molded plastic frame, portable and corrosion-resisted.

SPECIFICATIONS PERFORMANCE CHART
規格/性能曲線

※ 重量/性能以實物為準
Weight / Performance Is For Reference Only Actual Product May Vary

(測試流體：水 比重1.0)
Test Fluid : Water Sp.Gravity 1.0

Model 型 式	In/Outlet 進出口徑 (In)	Power馬力			50HZ			60HZ			Weight 重量kg (參考值)
		Phase 相 數	HP	Pole 極 數	Curve 曲線	Max.Head 全揚程 M	Max.Flow 全流量 L/min	Curve 曲線	Max.Head 全揚程 M	Max.Flow 全流量 L/min	
402H	2" X 1-1/2"	3	2	2	a	24	450	A	25	435	26/38
503H	2" X 2"	3	3	2	b	30	510	B	32	510	26/38
505H	2" X 2"	3	5	2	c	35	500	C	39	520	41/55
603L	2-1/2" X 2"	3	3	2	d	20	600	D	20	600	29/41
605H	2-1/2" X 2"	3	5	2	e	28	860	E	28	860	41/55
652L	2-1/2" X 2-1/2"	3	2	4	f	12	560	F	16	660	29/41
653L	2-1/2" X 2-1/2"	3	3	2	g	23	720	G	22	800	29/41
655L	2-1/2" X 2-1/2"	3	5	2	h	27	830	H	32	820	41/55
655H	2-1/2" X 2-1/2"	3	5	2	i	36	740	I	37	860	41/55
657H	2-1/2" X 2-1/2"	3	7.5	2	j	40	840	J	45	850	51/66
707	3" X 2-1/2"	3	7.5	2	k	32	900	K	44	1000	51/66

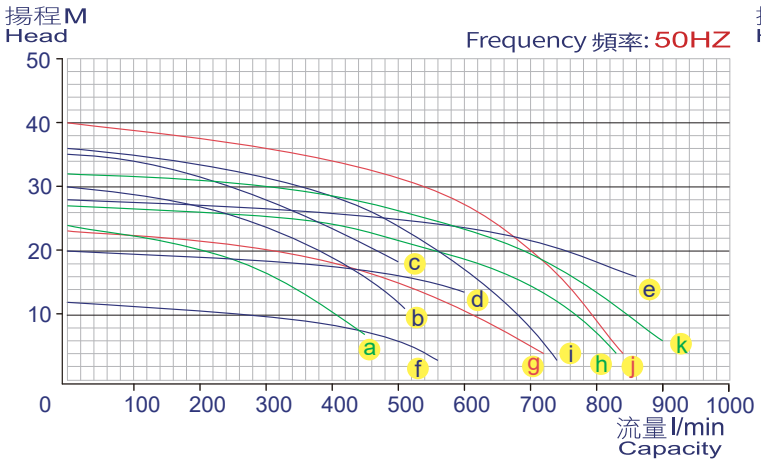

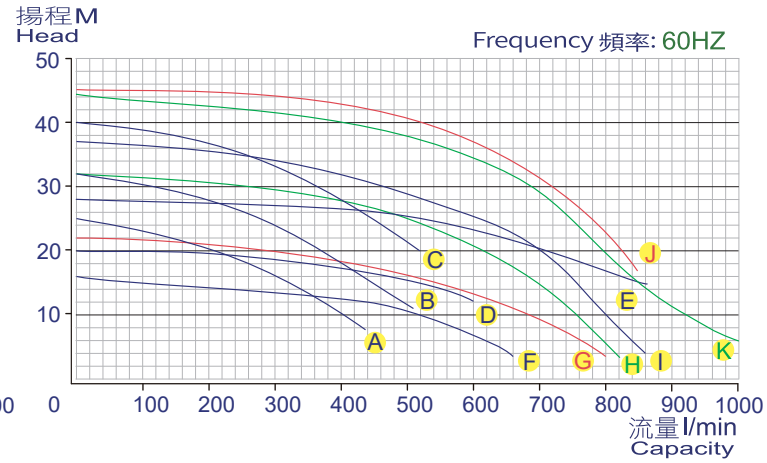

HM2-2 ~ 7-7.5 H P

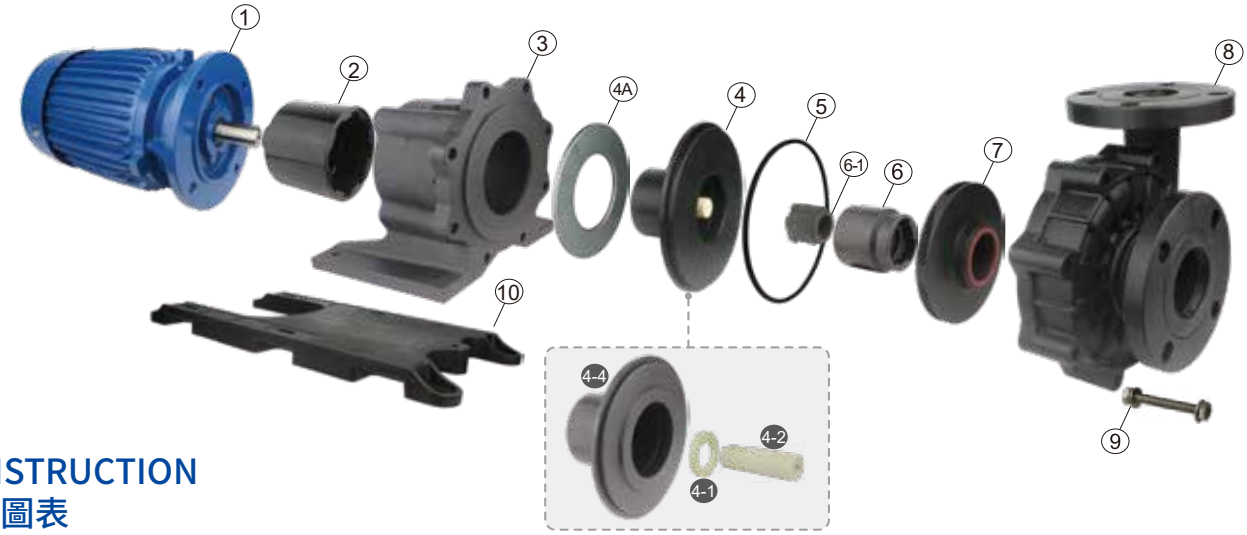

CONSTRUCTION
零件圖表

1	2	3	4	4-1	4-2	4-4	4A	5	6
馬達 Motor	外驅動磁鐵 Drive Magnet	接合座 Frame	後蓋含軸心 Rear cover and shaft	墊片 Washer	軸心 Shaft	後蓋 Rear cover	後蓋鐵片 Housing Stiffener	封蓋O環 Casing O-ring	葉輪內磁 Drive Magnet
FC/Alu	Magnet	FRPP	FRPP/PVDF CFRPP	Ceramic/SSIC Titanium	Ceramic/SSIC Titanium	FRPP/PVDF CFRPP	Zinc plated iron	NBR/EPDM VITON	FRPP/PVDF CFRPP

6-1	7	8	9	10
葉輪軸受 Impeller Bearing	葉輪 Impeller	前蓋 Front Casing	前蓋與接合座固定螺絲/Bolts	腳架 Base
Rulon/Carbom Ceramic/SSIC T-Teflon	FRPP/PVDF CFRPP	FRPP/PVDF CFRPP	SUS304	FRPP

DIMENSIONS
外觀尺寸

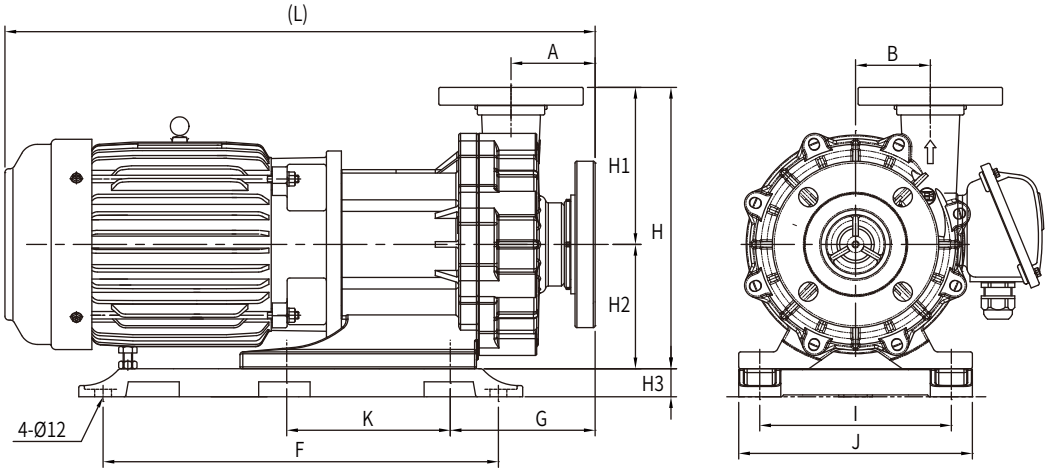

DIMENSION 尺寸表

Unit (單位):mm

Model 型 式	In-Outlet進出口徑 Dimension(mm)	A	B	H1	H2	H	H3	(L)	F	G	I	J	K
402H	50 x 40	91	80	162	120	282	30	588	423	150	205	250	175
503H	50 x 50	91	80	162	120	282	30	588	423	150	205	250	175
505H	50 x 50	91	80	162	133	295	30	626	423	150	205	250	175
603L	65 x 50	90	80	168	133	301	30	593	423	155	205	250	175
605H	65 x 50	90	80	168	133	301	30	631	423	155	205	250	175
652L	65 x 65	90	80	168	133	301	30	593	423	155	205	250	175
653L	65 x 65	90	80	168	133	301	30	593	423	155	205	250	175
655L	65 x 65	90	80	168	133	301	30	631	423	155	205	250	175
655H	65 x 65	90	80	168	133	301	30	631	423	155	205	250	175
657H	65 x 65	90	80	168	133	301	30	671	423	155	205	250	175
707	70 x 65	90	80	168	133	301	30	671	423	155	205	250	175

EXAMPLES
應用範例

A

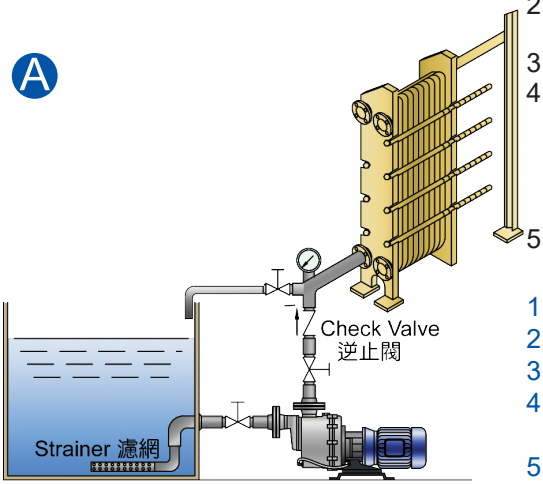

Example A

1.While applied to heat-exchanger, install a pressure gauge at the outlet to make sure no clog inside the pipeline.
2.Install a strainer at the inlet to stop articles or objects entering the pump. It also cut down the bubbles.
3.Install valves at the inlet and outlet for easy maintenance.
4.The diameter of each hole in the strainer should be approximately 5~7mm and the total mesh area of the strainer should be 5~10 times the area of the inlet.
It's better to enlarge the inlet pipeline.For example,enlarged 2-1/2" inlet pipeline could drop the resistance loss.
5.Set an overflow piping at the outlet pipeline and keep constantly opened to allow little overflow

1. 當應用於熱交換器時，於出口加裝壓力錶，以確定管路中有沒有阻塞。
2. 於入口加裝濾網，以阻止外物進入泵浦，也會減少氣泡的出現。
3. 於出入口的管路中加裝閥門，以便維護。
4. 濾網網孔的直徑應為約5~7mm，且濾網孔的面積應為入口管徑之5~10倍，入口管路最好加大管徑，如泵入口為2"，改配2-1/2"入口管，預防吸入量的不足。
5. 出水口配有回流管，正常開啟閥門，少量回流。

B

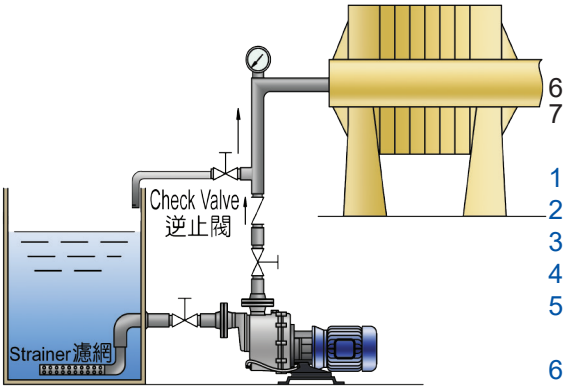

Example B

1. In order to monitor the flow and to detect possible clog of the filter, please set a pressure gauge at the outlet.
2. To eliminate damage caused by dry-running, please install a pressure safety shutoff.
3. Please clean up particles in the pump after operation.
4. Strainer is easy to be clogged. Clean it as usual.
5. The diameter of each hole in the strainer should be approximately 5~7mm and the total mesh area of the strainer should be 5~10 times the area of the inlet.
It's better to enlarge the inlet pipeline.For example,enlarged 2-1/2" inlet pipeline could drop the resistance loss.
6. Install valves at the inlet and outlet for easy maintenance.
7. Set an overflow piping at the outlet pipeline and keep constantly opened to allow little overflow.

1. 為了監視液體流動及偵測過濾機中可能的阻塞，請於出口加裝壓力錶。
2. 請加裝壓力保護斷電器以避免因空轉損壞。
3. 操作完畢，請清除泵浦中的外來物。
4. 注意入口濾網容易受阻塞，應時常清洗。
5. 濾網網孔的直徑應為約5~7mm，且濾網孔的面積應為入口之5~10倍，入口管路最好加大管徑，如泵入口為2"，改配2-1/2"入口管，預防吸入量的不足。
6. 於出入口的管路中加裝閥門，以便維護。
7. 出水口配有回流管，正常開啟閥門，少量回流。

C

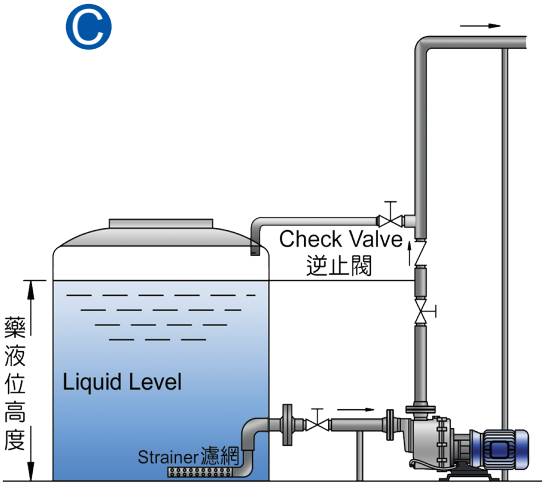

Example C

1. While applied to pump chemicals from the storage tank, please have a valve set at the inlet for the safety and convenience during maintenance.
2. Please monitor the level of the liquid in the tank to avoid dry-running.
3. Without check lid model is recommended.
4. Please install a check valve at the outlet while the height of piping exceeds 8M. It's better to enlarge the inlet pipeline.For example, enlarged 2-1/2" inlet pipeline could drop the resistance loss.
5. Please fasten in-outlet piping perfectly.
6. The motor shield must be applied while the pump is installed outdoors or in harsh conditions.
7. Set an overflow piping at the outlet pipeline and keep constantly opened to allow little overflow

1. 當應用於抽送儲存槽中之化學藥水時，請於入口加裝閥門，以維安全及維護上之便利。
2. 請監視槽內液體高度，以避免空轉。
3. 建議採用無單向閥機型。
4. 當配管高度大於8米時請於出口加裝逆止閥，逆止閥應高於液位以上，入口管路最好加大管徑，如泵入口為2"、改配2-/2"入口管，以防吸入量的不足。
5. 請將出入口管線固定好。
6. 當泵浦裝於戶外或惡劣環境中，馬達必需加蓋護罩。
7. 出水口配有回流管，正常開啟閥門，少量回流。

D

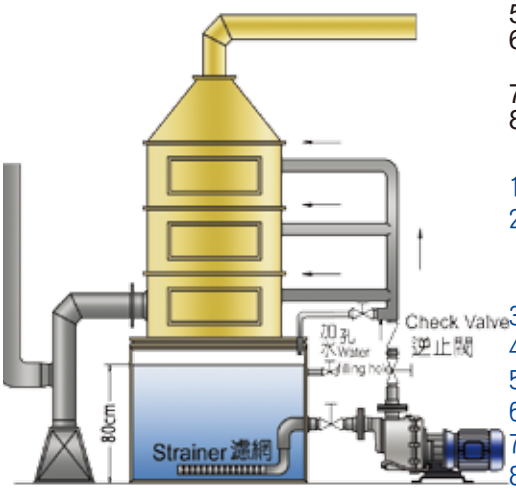

Example D
1. While applied to waste gas treatment tower, the tank should be large enough and the water-level in the tank should exceeds the inlet 80cm.
2. In order to avoid foreign particles clogging the inlet, please lower the inlet and install a strainer. (Mesh diameter approximately 5~7mm and the total mesh area of the strainer should be 5~10 times the area of the inlet.) It's better to enlarge the inlet pipeline.For example,enlarged 2-1/2" inlet pipeline could drop the resistance loss.
3. It should be easy to remove the strainer from the inlet for cleaning.
4. To avoid running out of liquid, please make sure that the water supplying system functions well.
5. To prevent the pump from dry running, please install a safety shutoff.
6. The motor shield must be applied while the pump is installed outdoors or in harsh conditions.
7. Install valves at the inlet and outlet for easy maintenance.
8. Set an overflow piping at the outlet pipeline and keep constantly opened to allow little overflow.

1. 當應用於廢氣塔時，水槽應夠大，且槽中水位應高於入口濾網80公分。
2. 為了避免外物阻塞入口，請降低入口並要裝濾網(網孔孔徑約5~7mm，且濾網孔的面積應為入口管徑之5~10倍)入口管路最好加大管徑，如泵入口為2"，改配2-1/2"入口管，預防吸入量的不足。
3. 入口濾網應易於取下清洗。
4. 請確認供水系統功能良好，以避免無水運轉(加裝自動補水系統)。
5. 請加裝保護斷電器，以防止泵浦空轉。
6. 當泵浦裝於戶外或惡劣環境中，馬達必需加蓋護罩。
7. 於出入口的管路中加裝閥門，以便維護。
8. 出水口配有回流管，正常開啟閥門，少量回流。

E

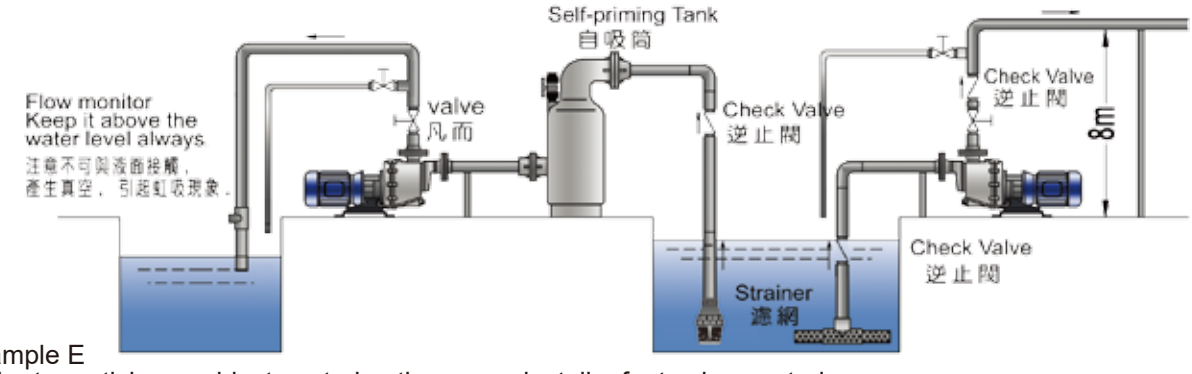

Example E
1. To stop articles or objects entering the pump, install a foot valve or strainer.
2. To prevent the inlet from sucking in bubble, please keep liquid level at least 30cmabove the strainer.
3. Check valve must be installed if the height of piping exceeds 8M.
4. To avoid dry-running, please install a safety shutoff.
5. For the safety of repair, the valve must be installed at the outlet.
6. 3" in/outlet models cannot do self-priming well. Install a self-priming tank to get it.
7. In order to avoid foreign particles clogging the inlet, please lower the inlet and install a strainer. (Mesh diameter approximately 5~7mm and the total mesh area of the strainer should be 5~10 times the area of the inlet.) It's better to enlarge the inlet pipeline.For example,enlarged 2-1/2" inlet pipeline could drop the resistance loss.
8. If the head of the outlet too high or the long transfer distance and the pressrue losing orve 1KG we suggest that install the outlet tee hose for backflow to tube. This can avoid the pressure of the backflow and the hot air can be exhausted will diminish the damage.
9. Set an overflow piping at the outlet pipeline and keep constantly opened to allow little overflow.

1. 加裝底閥或濾網，以防止外物進入泵浦。
2. 請保持液位最少高於入口濾網 30cm 以上，以防止吸入氣泡。
3. 當配管高度大於 8 米時，必需加裝逆止閥。
4. 請加裝保護斷電器，以防止泵浦空轉。
5. 為了維修安全，出口必需加裝閥門。
6. 出入口為 3" 之機型無自吸能力，請加裝自吸桶以獲得自吸能力。
7. 為了避免外物阻塞入口，請降低入口並要裝濾網（網孔孔徑約5~7mm，且濾網孔的面積應為入口管徑之5~10倍）。入口管路最好加大管徑，如泵入口為2"，改配2-1/2"入口管，預防吸入量的不足。
8. 出口揚程高或輸送距離較長，壓損超過1kg以上的使用場所建議在原出口加裝三通回流管，來防止反壓及熱氣排放減少損壞。
9. 出水口配有回流管，正常開啟閥門，少量回流。
※如安裝二台泵浦，不能共用入口管路

總公司

昇展實業股份有限公司

台灣省台南市永康區中正南路404巷7號

Tel:886-6-2534546, 2541601
Fax:886-6-2534226, 2420509

SUPER GIANT ENTERPRISE CO., LTD.
No.7,Lane 404,Chung Cheng South Road,Yen Hang,Yung Kang,Tainan,Taiwan,

Tel:886-6-2534546, 2541601
Fax:886-6-2534226, 2420509

E-mail:super@superpump.tw
Website: www.superpump.tw
www.chemicalfilter.com.cn

上海區 塑寶環保機械

江蘇省太倉市沙溪鎮岳王區
鎮北路16號 215400
Tel:0512-53303388,53303398
Fax:0512-53303588
E-mail:taichang@superpump.cn
Website: www.superpump.cn

廣東區 升展機械

廣東省廣州市增城區新塘鎮
民營西二路9號
(遠航科技園B1座 二樓)
Tel:020-82691835,82602341~3
Fax:020-82708706
E-mail:singtown@superpump.cn
Website: www.chemicalpump.cn

訂購時請提供下列資料:

1. 藥液條件: 名稱_____/溫度_____
   濃度_____/比重_____/黏度_____
2. 需求流量: _____L/min
3. 需求揚程: _____M
4. 馬達: 電壓/頻率

While placing your order...
Please kindly provide us the following information.

1. Chemical: Name_____/Concentration_____/
   Temperature_____/Specific Gravity_____/
   Viscosity_____
2. Capacity needed:_____L/min
3. Head needed:_____M
4. Power: Voltage/Frequency

Ver . 2020